EST. 1947 montalvo
Better Web Control®

# U-Series

Under Pillow Block Load Cells


IP67

## Montalvo U-Series Under Pillow Block Load Cells

Montalvo's U-Series are used in conjunction with pillow block mounted bearings and a shaft to create a durable and precise tension roll that's easy to install. With an IP67 rating the U-Series offers an extreme level of protection and performance for applications in wet, dusty, chemical, corrosive or other harsh environments.

## Features

- Industry leading 1550X Sensitivity
- Enhanced reliability simplifies tension control protection and repeatability
- Full Semiconductor Wheatstone Bridge (when used in pairs)
- Built-in overload stops
- Chemical and corrosion resistant
- High overload protection protects workers, equipment and product
- Drilled and tapped to customer bearing specifications

Montalvo

# U-Series

Under Pillow Block Load Cells

## Dimensions

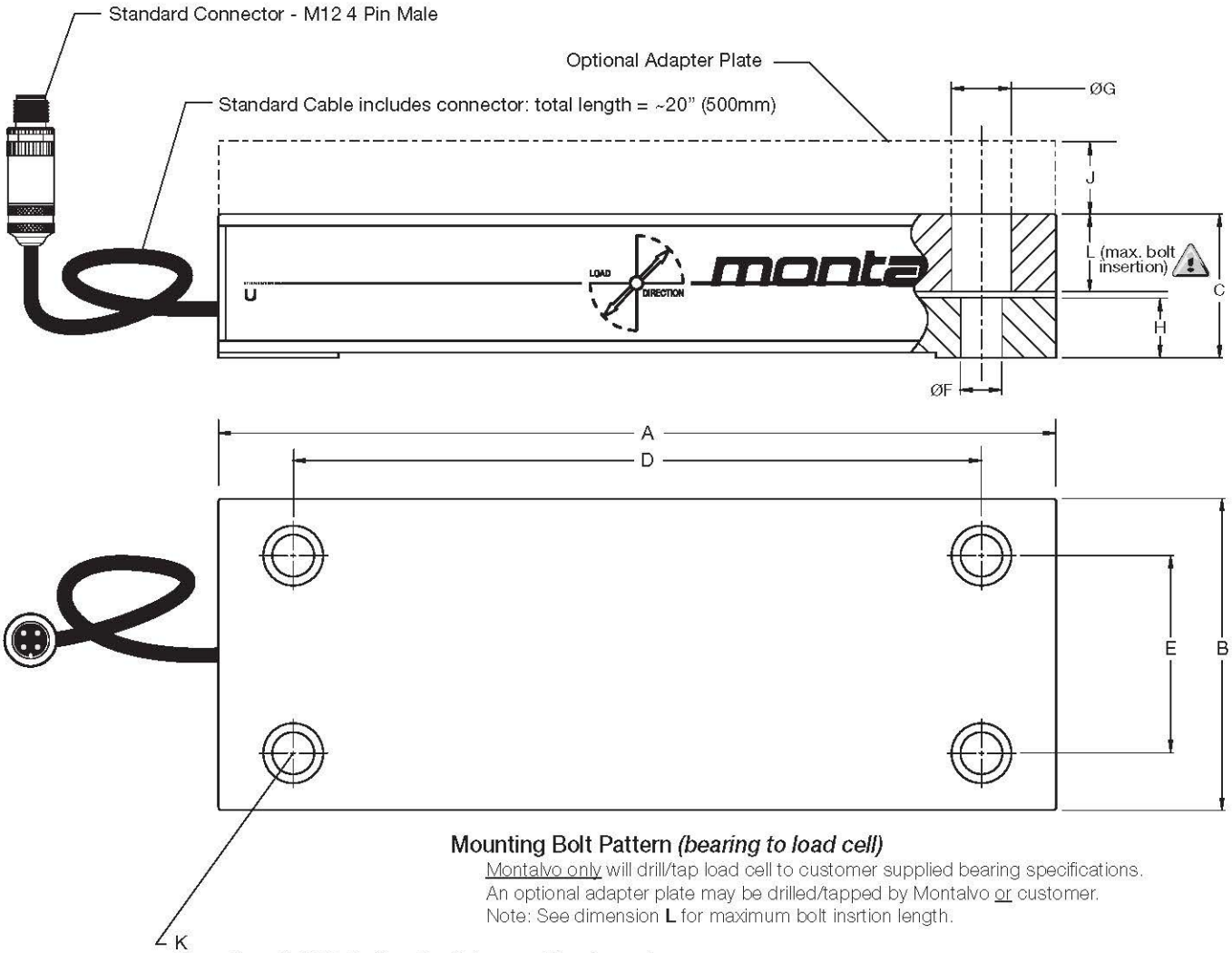


**Mounting Bolt Pattern** ***(bearing to load cell)***

Montalvo only will drill/tap load cell to customer supplied bearing specifications.
An optional adapter plate may be drilled/tapped by Montalvo or customer.
Note: See dimension **L** for maximum bolt insrtion length.

**Mounting Bolt Hole** ***(load cell to machine frame)***

Bolts to be customer supplied.
SHCS - Typ.

| Size | A | B | C | D | E | ØF | ØG | H | J | K | L |
|---|---|---|---|---|---|---|---|---|---|---|---|
| U25 | 5.28 (134) | 1.74 (44) | 1.10 (28) | 4.65 (118) | 1.10 (28) | 0.27 (7) | 0.47 (12) | 0.44 (11) | 0.50 (12) | 1/4" (M6) | 0.63 (16) |
| U50 | 8.27 (210) | 2.68 (68) | 1.42 (36) | 7.09 (180) | 1.73 (44) | 0.35 (9) | 0.59 (15) | 0.55 (14) | 0.70 (19) | 5/16" (M8) | 0.78 (20) |
| U75 | 11.02 (280) | 4.09 (104) | 1.89 (48) | 9.06 (230) | 2.60 (66) | 0.55 (14) | 0.79 (20) | 0.83 (21) | 1.00 (25) | 1/2" (M12) | 1.02 (26) |
| U120 | 16.54 (420) | 5.91 (150) | 2.60 (66) | 12.60 (320) | 3.54 (90) | 0.87 (22) | 1.34 (34) | 1.18 (30) | 1.30 (34) | 3/4" (M20) | 1.34 (34) |

## How To Specify

### Series

U, N, ES or F

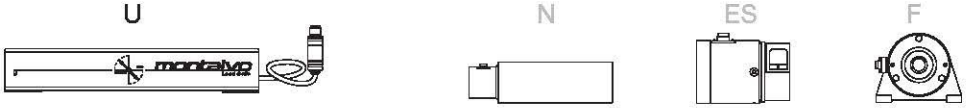


### Size

25, 50, 75 or 120

Consider the following:
Load rating & size of pillow block bearing to be installed

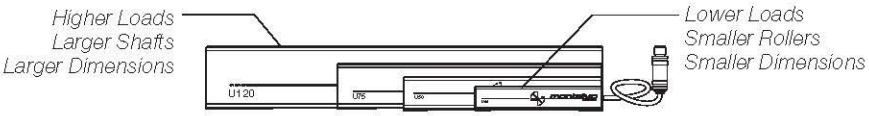


### Load Rating

*Step 1* Determine Weight of Roll, $F_g$ (fig. 1) :
$F_g$ = weight of roll (lb)

*Step 2* Determine Resulting Force, $F_{res}$ (fig. 2) :
$F_{res} = 2 \cdot F_{web} \cdot \sin X/2$
$F_{web}$ maximum web tension (lb)
X wrap angle of web (°)
lb represents pounds force (TOTAL tension)

*Step 3* Determine Height Factor, d (fig. 3) :
d = (a + c) / b
a* perpendicular distance from hinge to mounting surface (in) (see table 1)
b parallel distance from hinge to center of load cell (in) (see table 1)
c center height of selected bearing housing
* add thickness of adapter plate if used ( dimension J )

*Step 4* Determine Load Value, $F_{dim}$ (fig. 4) :
$F_{dim} = \frac{1}{2} \cdot F_{res} \cdot (\cos Z + d \cdot \sin Z) \cdot k_{dim} + \frac{1}{2} \cdot Fg \cdot (\cos Y + d \cdot \sin Y)$
Z attacking angle of resulting force (°)
Y attacking angle of $F_g$
$k_{dim}$ dimensional factor = 1.6

*Step 5* Determine Load Rating - lb (N) :
Select nearest rating equal to or greater than larger value $F_g$ or $F_{dim}$
$F_g$ answer to Step 1
$F_{dim}$ answer to Step 4
Rating - Size 25 20 (100) / 50 (250) / 100 (500) / 200 (1000)
Rating - Size 50 100 (500) / 250 (1250) / 500 (2500) / 1000 (5000)
Rating - Size 75 1000 (5000) / 2500 (12500) / 5000 (25000)
Rating - Size 120 5000 (25000) / 10000 (50000) / 20000 (100000)

*fig. 1*

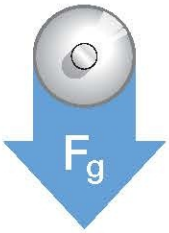


*fig. 2*

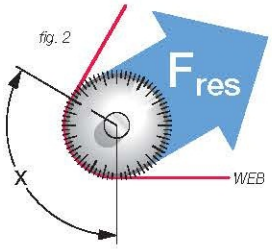


*table 1* in (mm)

| Size | a | b |
|---|---|---|
| U25 | 0.97 (24.6) | 1.5 (38) |
| U50 | 1.18 (30) | 2.99 (76) |
| U75 | 1.61 (41) | 3.74 (95) |
| U120 | 2.17 (55) | 5.24 (133) |

*fig. 3*

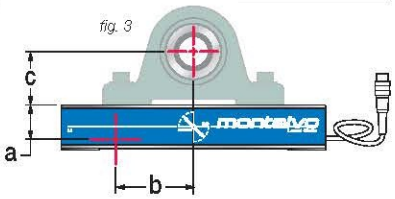


*fig. 4*

Hinge End of load cell must mount so that Resulting Force Fres attacks in:
1st quadrant (0-90°) or
3rd quadrant (180-270°)

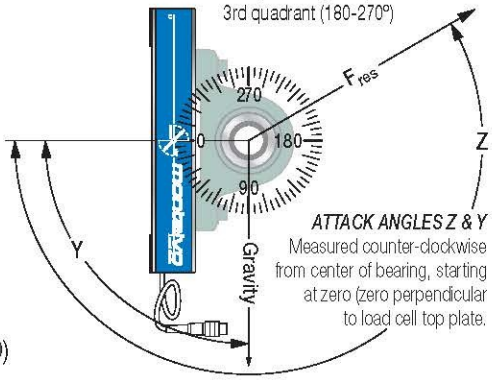


*ATTACK ANGLES Z & Y*
Measured counter-clockwise from center of bearing, starting at zero (zero perpendicular to load cell top plate.

### Example

**U - 75 - 2500LB**

Series - U
Size - 75
Load Rating - 2500LB (12500N)

Include bearing bolt info and cable length option.

Montalvo

# U-Series

Under Pillow Block Load Cells

## How They Work

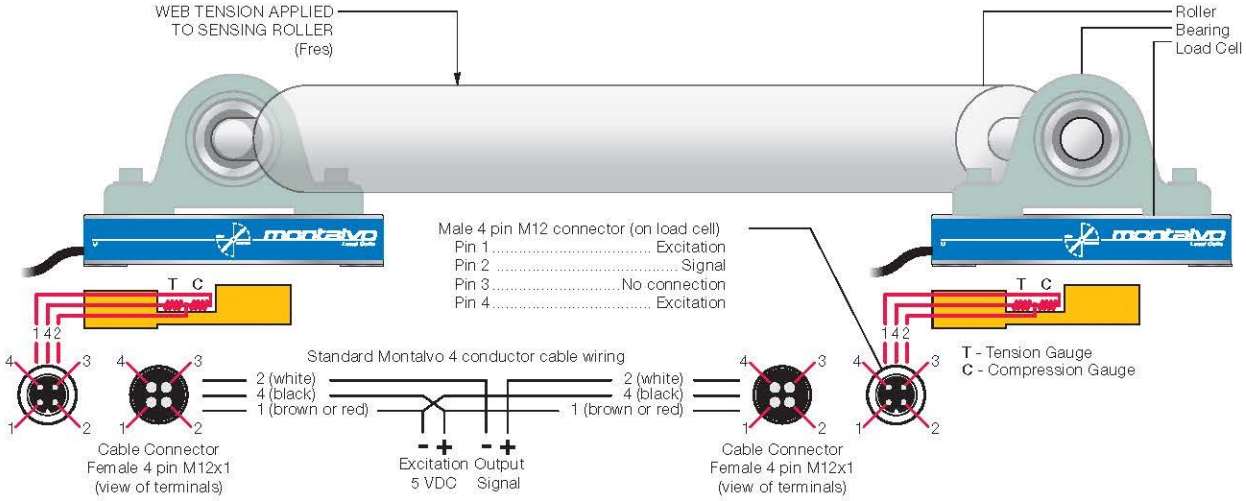


## Specifications

Electrical

Supply voltage ..... 5 VDC
Output ..... 250 mV, nominal @ full load
Gauge: Resistance ..... 80 - 130 Ω
Type ..... semi-conductor
Non-Repeatability ..... ±0.2% full span
Non-Linearity & hysteresis (combined) ..... ±0.5% full span

Connector (standard)

Type ..... Male 4 pin M12
Pin 1 ..... Excitation
Pin 2 ..... Signal
Pin 3 ..... No connection
Pin 4 ..... Excitation
Cable length (including connector) ..... 20 in. (500mm)
Non-standard cable (optional) ..... By request
No connector (optional) ..... By request

Load Rating* - lb (N)

25 ..... 20 (100) / 50 (250) / 100 (500) / 200 (1000)
50 ..... 100 (500) / 250 (1250) / 500 (2500) / 1000 (5000)
75 ..... 1000 (5000) / 2500 (12500) / 5000 (25000)
120 ..... 5000 (25000) / 10000 (50000) / 20000 (100000)

Overload Rating - lb (N)

25 ..... 600 (3000)
50 ..... 3000 (15000)
75 ..... 15000 (75000)
120 ..... 60000 (300000)
Overload stops ..... Factory set @ 110%

* Recommended that Montalvo be contacted to ensure proper sizing.

Environmental

Enclosure protection class ..... IP 67
Operating temp. °F (°C) ..... -4 to +176 (-20 to +80)

Mechanical - in (mm)

Deflection (at nominal force) ..... 0.005 to 0.010 (0.3 to 0.25) typ.
Material ..... stainless steel

Dimensions in (mm)

25 ..... 5.28 x 1.73 x 1.10 (134 x 44 x 28)
50 ..... 8.27 x 2.68 x 1.42 (210 x 68 x 36)
75 ..... 11.02 x 4.09 x 1.89 (280 x 104 x 48)
120 ..... 16.54 x 5.91 x 2.60 (420 x 150 x 66)

Weight - lb (kg) approximate (does not include bearing)

25 ..... 2.5 (1.1)
50 ..... 6 (2.5)
75 ..... 18 (8)
120 ..... 60 (26)

Bearings

Self-aligning ..... Recommended

## Related Montalvo Products

The ***NEW*** S4 Digital Tension Controller
The ***NEW*** A4 Digital Load Cell Amplifier
The ***NEW*** i4HD Tension Indicator
and... Cables